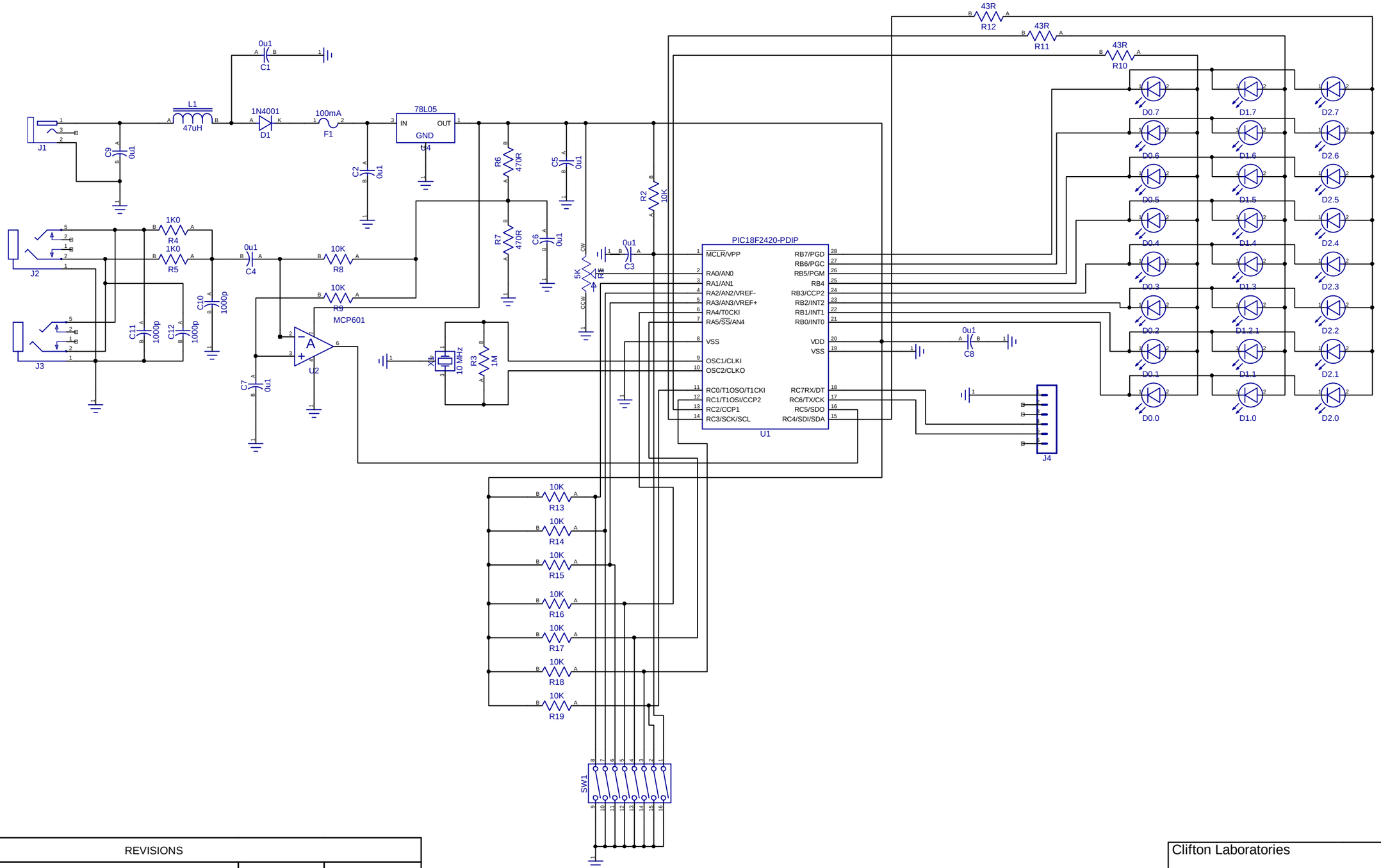

REVISIONS				
ZONE	REV	DESCRIPTION	DATE	APPROVED
D5	1	Corrected J2 & J3 connection	05 May 2007	JRS

Clifton Laboratories		
Size B	Title: Z100 CW Tuning Aid	Rev 1
Date 17 May 2007		Drawn by JRS
Filename Z100 CW Tuner.dch		Sheet 1/1